HSF

NOTES:
Rated Voltage:250V AC/DC
Rated Current:2.0AMP
Contact Resistance: 20mΩ max
Withstand Voltage: 800V AC/Minute
Insulation Resistance: 1000MΩ min
Operation Temperature: −40℃ to +105℃

Contact Material: Phosphor Bronze
Contact plating: Sn over Ni or Au over Ni
Fit wire Range: 22#~28#AWG(O.D: 1.50mm Max.)
A4

Ordering Information

WF 2002 - T P SN 0 1

Material
P=Phosphor bronze

Contact Plating
S0=Gold Flash/Tin
S3=10u"Gold/Tin
S4=15u"Gold/Tin
S5=30u"Gold/Tin
SN=Tin

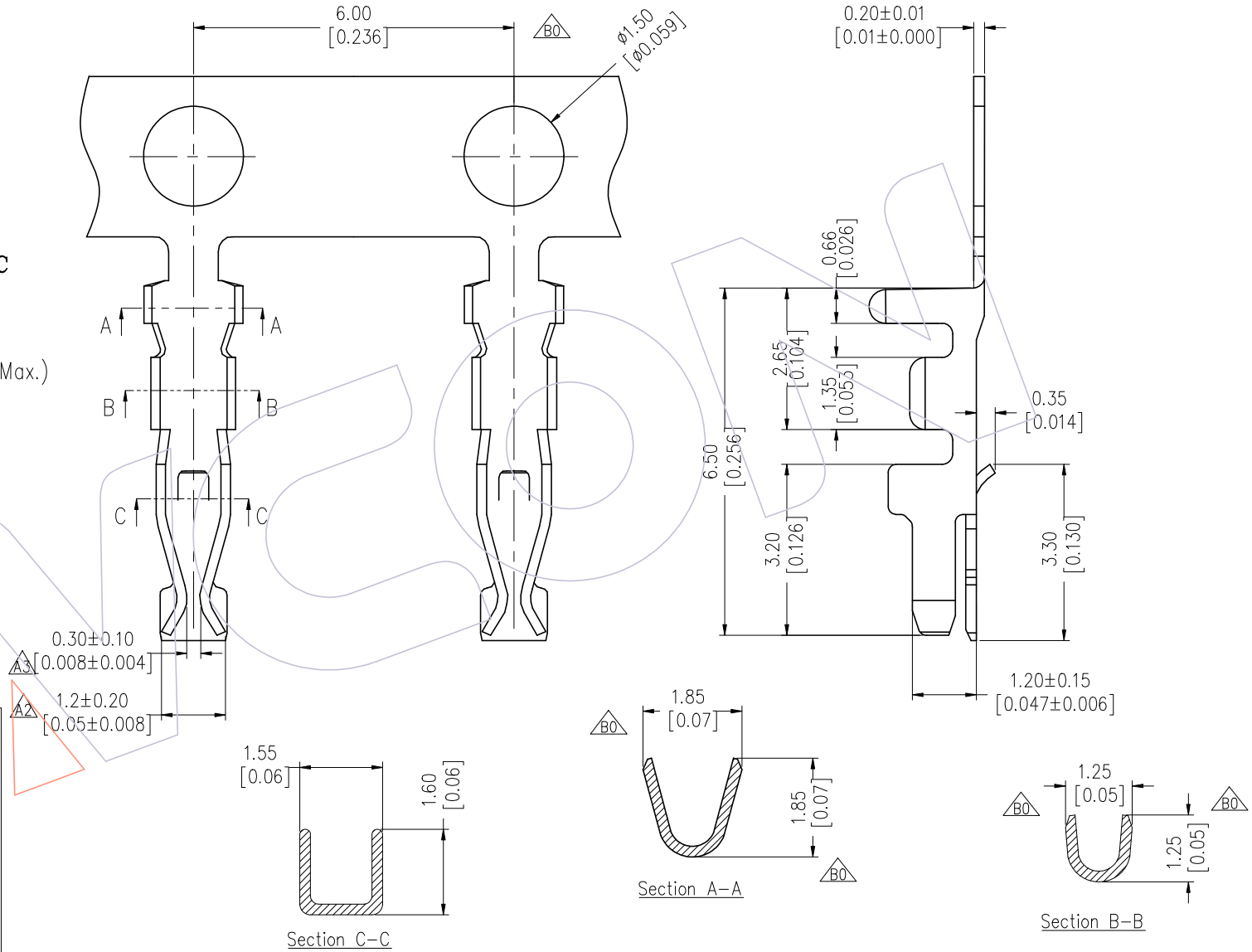

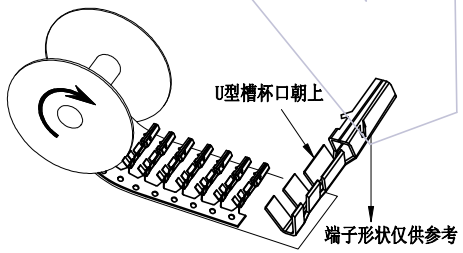

端子电镀后绕盘方向示意图

REV	DATE	MODIFICATION DESCRIPTION	CHANGE
B0	22/06/23	增加绕盘方向示意图	——
A4	19/10/26	Modify drawing	——
A3	17/09/18	Modify drawing	——
A0	08/07/30	NEW	——

OPERATION	
X.X	±0.40
X.XX	±0.25
X.XXX	±0.15
Angle	± 3°
DIM	TOL

DRAW LZH	DATE 22/06/23	SCALE	FIT
CHECK	DATE	UNIT	mm
		SIZE	A4
APPROVE	DATE	SHEET	1/1
		PROJ.	

PART NO. SEE TAB

TITLE: PHD2.00mm TERMINAL

Customer NO.

WCON
Http: www.wcon.com

WCON-Dongguan
Tel: +86 769 85358920
Fax: +86 769 85358915
E-mail: sales@wcon.com

WCON-Kunshan
Tel: +86 512 57468408
Fax: +86 512 57468468
E-mail: wconks@wcon.com