HSF

HOUSING MATERIAL
Insulation Material:PBT+30%GF(UL94V-0)
IDC Contact Material:Phosphor Bronze
DIP Contact Material:Brass
Contact plating:Au or Sn Over Ni

SPECIFICATIONS
Insulation Resistance:5MΩ Min
Contact Resistance:1.0Ω Max
Withstand Voltage:DC 300V, 10S
The Cable Assembly Must 100% Test

CABLE MATERIAL
Insulation:UL 2651,Grey Red Side
Conductor:28AWG(7/0.12mm)
Electrical:300V

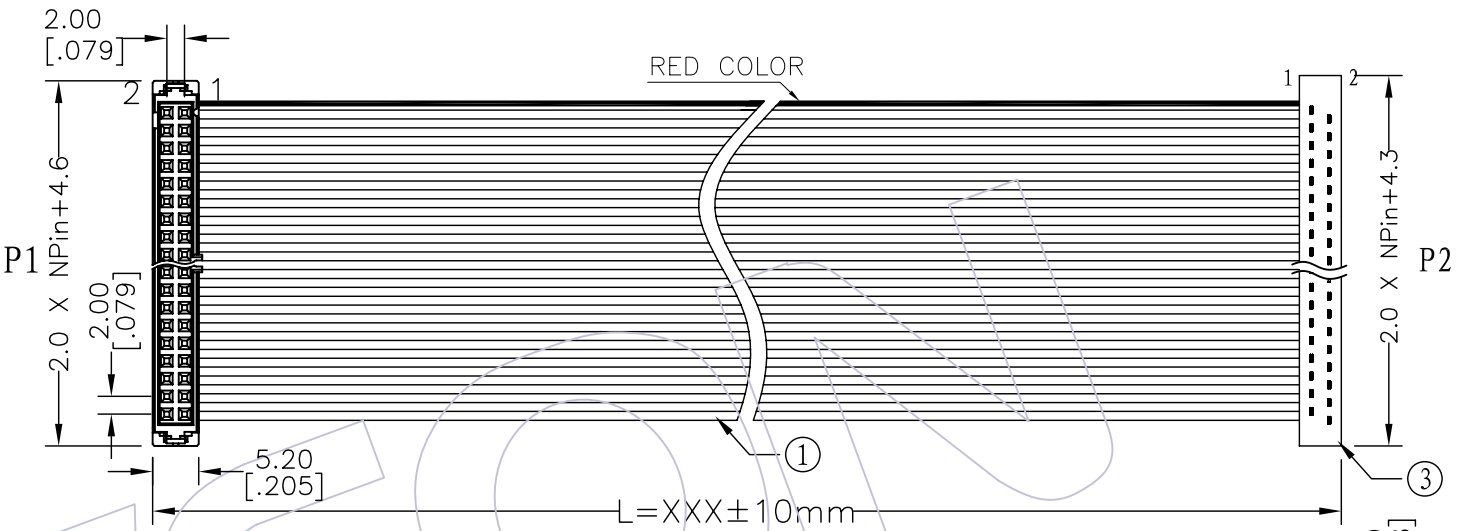

CONNECT METHOD

P1	P2
1	1
2	2
3	3
XX	XX
XX	XX

Ordering Information

FB22 - xx xx G A B xxx - 81

- No.OF Pins: 04~64p
- Contact Plating:
  - G0=Gold Flash
  - G3=10u"Gold
  - G4=15u"Gold
  - G5=30u"Gold
  - S0=Gold Flash/Ni
  - S3=10u"Gold/Ni
  - S4=15u"Gold/Ni
  - S5=30u"Gold/Ni
  - SN=Tin
- Connector Direction: G=Opposite Direction
- Connector Color: B=Black
- Length of Line(mm)

NO.	PART NO.	NAME	TITLE	QT'Y	UNIT
③	5320-XXBXXB01	CONN.	2.00 DIP **P PBT Black Brass Plating Xu" gold	1	SET
②	5223-XXYPXXBW01	CONN.	2.00 IDC **P T TYPE PBT Black Phosphor Bronze Plating Xu"	1	SET
①	F1U-B28GXXD0-XXXX-1	WIRE	UL2651 PH1.0mm XXP 28AWG(7/0.12TC) PVC Grey Marking Red Side	XXXX	MM

REV	DATE	MODIFICATION DESCRIPTION	CHANGE	APPROVE
A0	09/08/26	NEW	——	——

OPERATION				
X.X	±0.40	DRAW	BEN	09/08/26
X.XX	±0.25	DESIGN		
X.XXX	±0.15	CHECK		
Angle	± 3°	APPROVE		
DIM	TOL			

SCALE	1:1
UNIT	mm
SIZE	A4
SHEET	1/1
PROJ.	

WCON 维峰五金电子有限公司
WAFE HARDWARE ELECTRONICS CO.LTD

PART NO.	FB22 -xxxxGABxxx-81
TITLE:	2.00 T TYPE IDC Drawing
Customer NO.	