# HSF

IDC HOUSING MATERIAL
Insulation Material:PBT+30%GF(UL94V-0)
Contact Material:Phosphor Bronze
Contact plating:Au or Sn Over Ni

SPECIFICATIONS
Insulation Resistance:5MΩ Min
Contact Resistance:1.0Ω Max
Withstand Voltage:DC 300V, 10S
The Cable Assembly Must 100% Test

CABLE MATERIAL
Insulation:UL 2651,Grey Red Side
Conductor:28AWG(7/0.12mm)
Electrical:300V

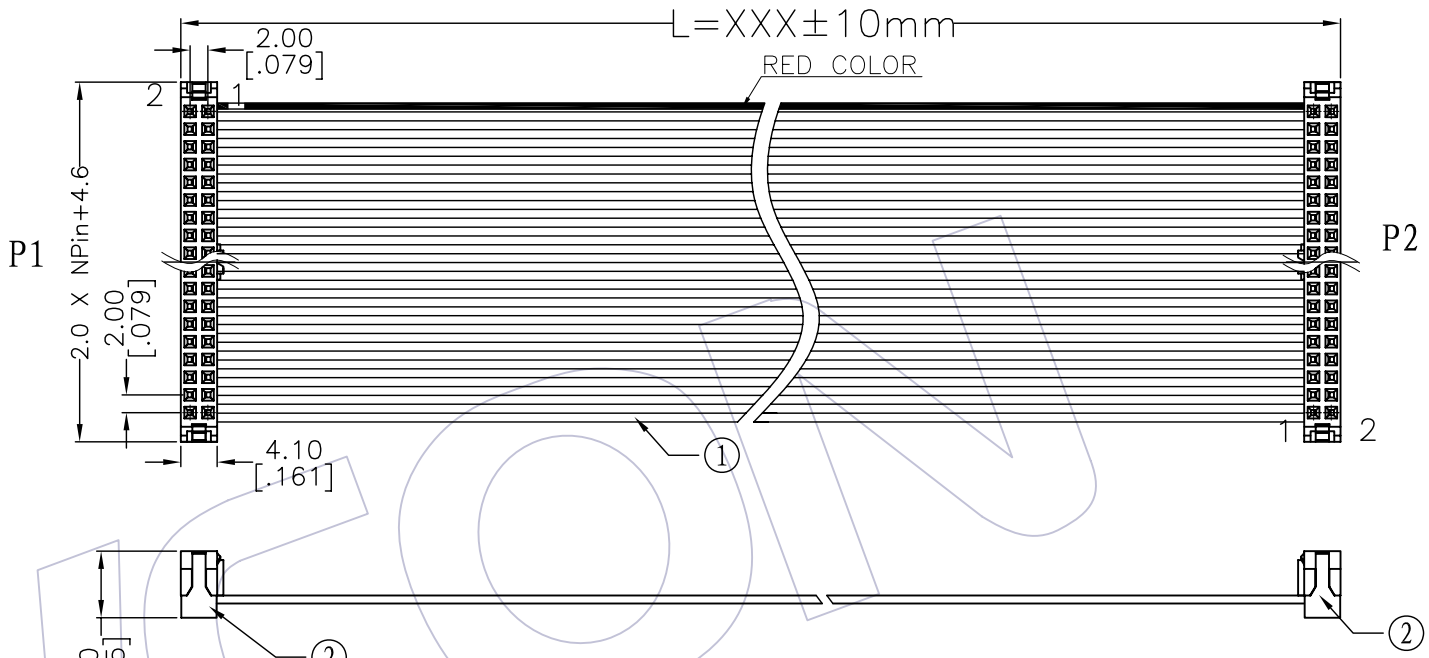


## *Ordering Information*

FA22 - xx xx A B B xxx - 91

- No.OF Pins: 04~64p
- Contact Plating:
  - G0=Gold Flash
  - G3=10u"Gold
  - G4=15u"Gold
  - G5=30u"Gold
  - S0=Gold Flash/Ni
  - S3=10u"Gold/Ni
  - S4=15u"Gold/Ni
  - S5=30u"Gold/Ni
  - SN=Tin
- Connector Direction: A=same Direction
- Connector Color: B=Black
- Length of Line(mm)

CONNECT METHOD

| P1 | P2 |
|---|---|
| 1 | XX |
| 2 | XX |
| 3 | XX |
| 4 | XX |
| XX | 2 |
| XX | 1 |

| NO. | PART NO. | NAME | TITLE | QT'Y | UNIT |
|---|---|---|---|---|---|
| 2 | 5224-XXYPXXBW01 | CONN. | 2.00 IDC **P F TYPE PBT Black Phosphor Bronze Plating Xu" gold | 2 | SET |
| 1 | F1U-B28GXXD0-XXXX-1 | WIRE | UL2651 PH1.0mm XXP 28AWG(7/0.12TC) PVC Grey Marking Red Side | XXXX | MM |

| REV | DATE | MODIFICATION DESCRIPTION | CHANGE | APPROVE |
|---|---|---|---|---|
| A0 | 09/08/27 | NEW | | |

| OPERATION | | | | |
|---|---|---|---|---|
| X.X | ±0.40 | DRAW | BEN | 09/08/27 |
| X.XX | ±0.25 | DESIGN | | |
| X.XXX | ±0.15 | CHECK | | |
| Angle | ± 3° | APPROVE | | |
| DIM | TOL | | | |

| | |
|---|---|
| SCALE | 1:1 |
| UNIT | mm |
| SIZE | A4 |
| SHEET | 1/1 |
| PROJ. | |

WCON 维峰五金电子有限公司
WAFE HARDWARE ELECTRONICS CO.LTD

| | |
|---|---|
| PART NO. | FA22 -xxxxABBxxx- 91 |
| TITLE: | 2.00 F TYPE IDC Drawing |
| Customer NO. | |