NOTES:
1.No.of Positions: 5 Pin
2.Rated Current: 12.0 A Max;
3.Contact Resistance: 20mΩ Max;
4.Withstand Voltage: 2000V AC;
5.Insulation Resistance: 1000MΩ Min ;
6.Operation Temperature: -55℃ to +150℃ ;
7.Housing Material: LCP
8.Contact Material: Copper Alloy ;
9.Contact Plating: Au over Ni ;

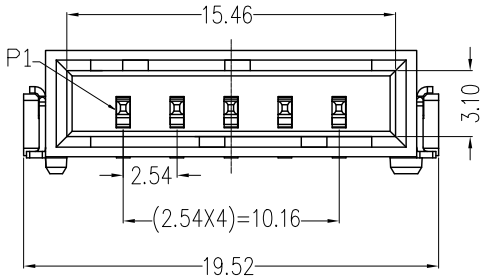

Recommended P.C.B Layout(Top Side)
(PCB BOARD TOLERANCE±0.05)

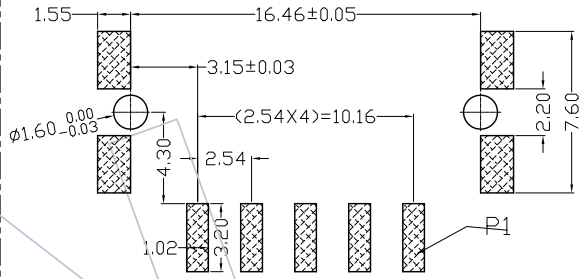

Ordering Information

3915-P 05-1 Z XX W D X R 1

Contact Plated:
W3=10u″ Gold /Matte Sn
W4=15u″ Gold /Matte Sn
W5=30u″ Gold /Matte Sn

Color:
B=BLACK
U=BLUE
G=GREEN
R=RED

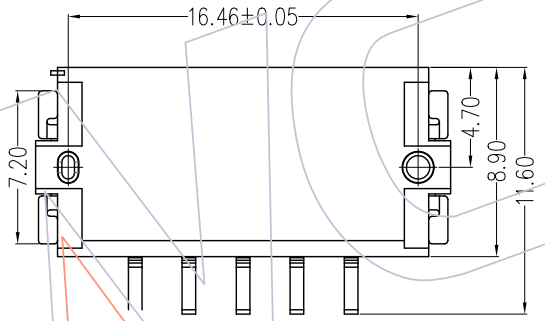

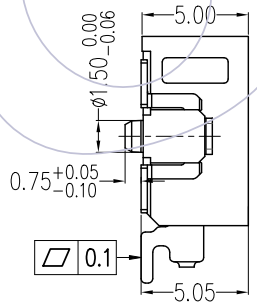

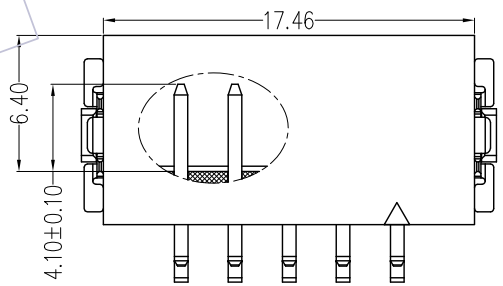

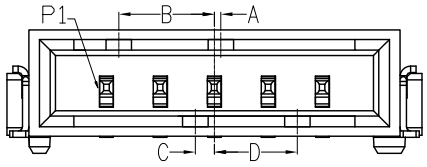

Stay Basin

PART NO.	COLOR	防呆尺寸			
		A	B	C	D
3915-P05-1ZXXWDBR1	BLACK	0.3	4.5	0.9	3.9
3915-P05-1ZXXWDUR1	BLUE	1.5	3.3	2.1	2.7
3915-P05-1ZXXWDGR1	GREEN	2.7	2.1	3.3	1.5
3915-P05-1ZXXWDRR1	RED	3.9	0.9	4.5	0.3

REV	DATE	MODIFICATION DESCRIPTION	CHANGE
A0	2019/07/05	NEW	——

OPERATION	
X.X	±0.40
X.XX	±0.25
X.XXX	±0.15
Angle	± 3°
DIM	TOL

DRAW Ding	DATE 2019/07/05	SCALE	FIT
CHECK	DATE	UNIT	mm / inch
APPROVE	DATE	SIZE	A4
		SHEET	1/1
		PROJ.	

PART NO. 3915-P05-1ZXXWDXR1

TITLE: LSC Connector - Single Row 90° SMT Plug (5 PIN)

Customer NO.

WCON
Http: www.wcon.com
WCON-Dongguan
Tel: +86 769 85358920
Fax: +86 769 85358915
E-mail: sales@wcon.com
WCON-Kunshan
Tel: +86 512 57468408
Fax: +86 512 57468468
E-mail: salesks@wcon.com